# USB controlled Relay

## Variant: [No Variations]

## Revision: A

RELEASED Oct-01-2024


| Page | Index | Page | Index | Page | Index |
|---|---|---|---|---|---|
| 1 | Cover Page | 11 | ..... | 21 | ..... |
| 2 | Revision History | 12 | ..... | 22 | ..... |
| 3 | Main Schematics | 13 | ..... | 23 | ..... |
| 4 | ..... | 14 | ..... | 24 | ..... |
| 5 | ..... | 15 | ..... | 25 | ..... |
| 6 | ..... | 16 | ..... | 26 | ..... |
| 7 | ..... | 17 | ..... | 27 | ..... |
| 8 | ..... | 18 | ..... | 28 | ..... |
| 9 | ..... | 19 | ..... | 29 | ..... |
| 10 | ..... | 20 | ..... | 30 | ..... |


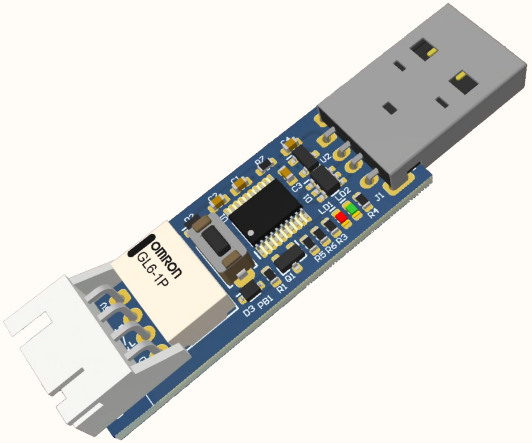


DESIGN CONSIDERATIONS

RevisionHistory

MainSchematics

DESIGN NOTE:
Example text for informational design notes.

DESIGN NOTE:
Example text for critical design notes.

DESIGN NOTE:
Example text for cautionary design notes.

LAYOUT NOTE:
Example text for critical layout guidelines.

| | | |
|---|---|---|
| Project: *USB controlled Relay* | | Revision: *A* |
| Title: **Cover Page** | | |
| Sheet: 1 of 3 | Author: Alfredo Cortellini | |
| Date: Oct-01-2024 | License: CC BY-NC-SA 4.0 | |

ITLogic

BY NC SA

# REVISION HISTORY

| *DATE* | *PAGES* | *REVISION* |
|---|---|---|
| **Oct-01-2024** | **N/A** | **Initial release A** |

## Main microcontroller

A full-speed USB has a differential characteristic impedance (Z0) of 90 Ω ±15%, a common mode impedance (ZCM) of 30 Ω ±30%, and a maximum one-way delay of 26 ns.
Full Speed rise fall time min 4ns max 20ns.

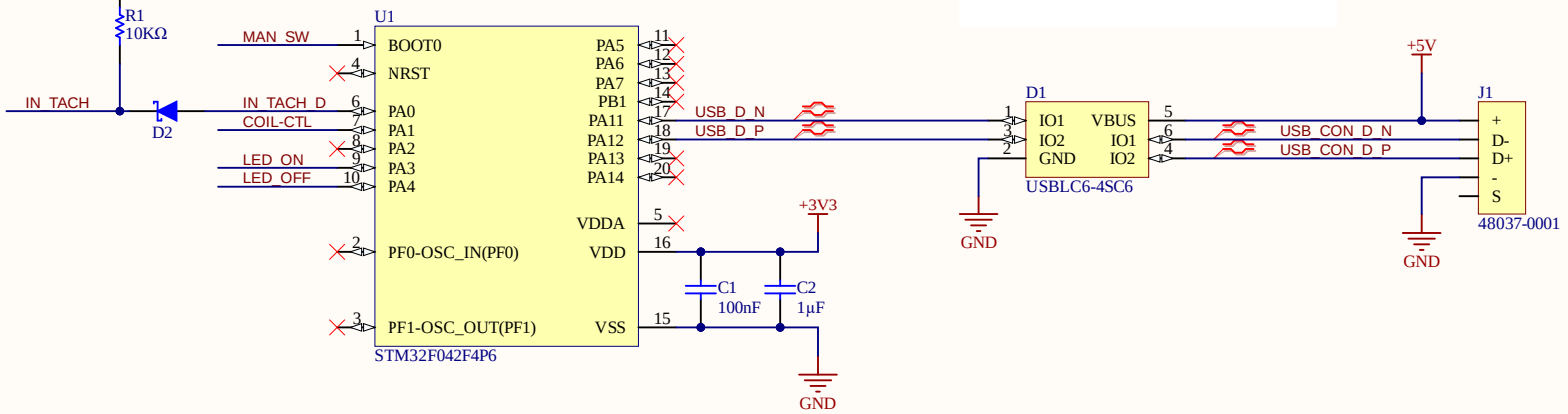


## Relay interface

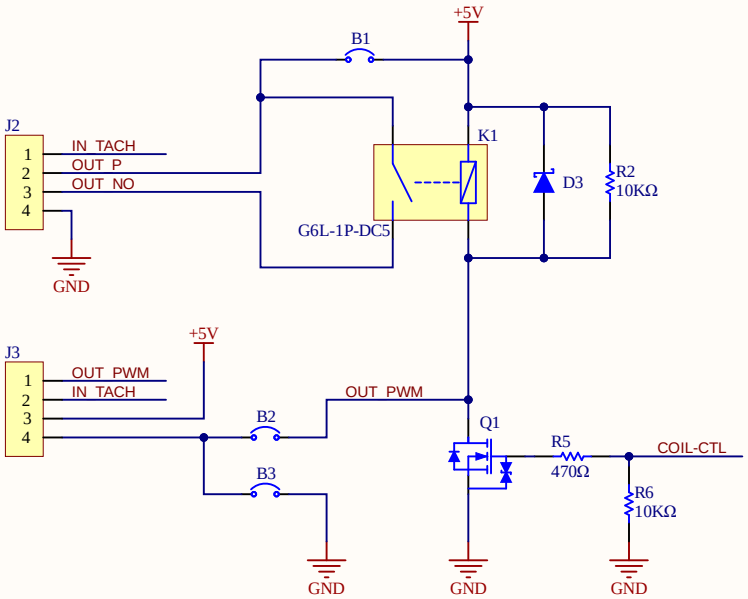


## Power Supply

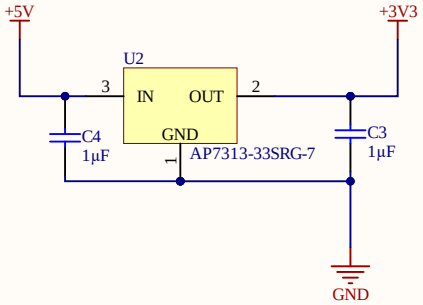


## LED Status & Switch interface

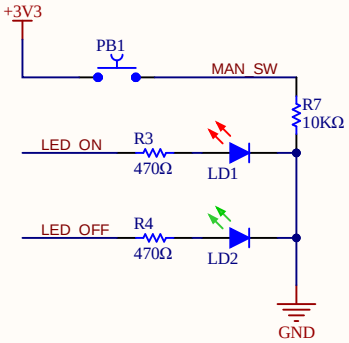


| | |
|---|---|
| Project: *USB controlled Relay* | Revision: *A* |
| Title: **Main Diagram** | |
| Sheet: 3 of 3 | Author: Alfredo Cortellini |
| Date: Oct-01-2024 | License: CC BY-NC-SA 4.0 |

ITLogic

CC BY NC SA